ANNUAL POLICING PLAN

FOR THE YEAR 2016-17

CAPITAL CITY POLICE LAHORE

Capital City Police Officer,
Lahore

Aim

To improve the working of a police station as per the aspirations of a “Common Man” with focus on “Service Delivery” and improving "*Thana* Culture”

Vision

A Pilot Project – Which provides guidelines / solutions to all problems pertaining to police working.

i. Rule of law
ii. Citizen Friendly
iii. Service Oriented
iv. Functional Specialization
v. Police Public Partnership

Mission

To fight crime & provide effective security & law enforcement through active participation of community.

Values

Impeccable integrity, gallantry, faithfulness, justice, professionalism, commitment, accountability, service to the community.

*****

INTRODUCTION

This Annual Policing Plan is based on requirements of the Police Order 2002 for approval of the Provincial Government and oversight by the Provincial Public Safety and Complaints Commission.

History of Lahore

***Moghal* Era**

The geographical boundaries of the place now called 'Lahore' have been the traditional capital of Punjab for a thousand years. It had been the cultural centre of northern India extending from Peshawar to New Delhi. It holds this pre-eminent position in Pakistan as well. Lahore is the city of poets, artists and the centre of film industry. It has the largest number of educational institutions in the country and some of the finest gardens in the continent.

Geography

Lahore is the capital of Punjab Province. It lies in the north near the Indian border, some 650 miles (1,050 kilometers) northeast of Karachi. Lahore, the nation's second largest city, is a major center of transportation, manufacturing, and commerce. Culturally, it is Pakistan's leading city, mainly because of its long history, Islamic tradition, and outstanding buildings and institutions. Among them are the great Badshahi Mosque, Shalimar Gardens, and Punjab University. Lahore, an ancient city, first became prominent during the 11th and 12th centuries as capital of two Muslim kingdoms that originated in Afghanistan. Thereafter, for almost 400 years, it was devastated repeatedly by invaders, mainly Mongols from the north. A golden age came with the Moguls during the 16th and 17th centuries, when

magnificent mosques, gardens, tombs, and palaces were built. Control passed to the *Sikhs* in 1767 and to the British in 1849. With India's partition in 1947, Lahore became part of Pakistan.

It is located near the Ravi River and Wagah, close to the Pakistan-India border. According to legend, Lahore was founded by Lav, son of Lord Rama of the Hindu epic Ramayana. Punjabi and Urdu are the native languages of the province and the most widely-spoken language in Lahore and rural areas. Urdu and English, however, are becoming more popular with younger generations since they are officially supported, whereas Punjabi has no official patronage. Many people of Lahore who speak Punjabi are known as Lahori Punjabi due to their use of a mixture of Punjabi and colloquial Urdu. According to the 1998 census, Lahore's population was nearly 7 million. Mid-2006 government estimates put the population at approximately 10 million. Currently it is estimated to be around 12 million. Lahore is bounded on the north and west by the Sheikhupura District, on the east by Wagah, and on the south by Kasur District. The Ravi River flows on the northern side of Lahore. Lahore city covers a total land area of 404 km^2 and is still growing.

Earlier the Lahore comprised only 6 towns. However in 2001 due to revision of administrative setup it was tagged as Capital City District, further 3 new towns were added. So the total town size rose from 6 to 9. Under each town there are respective union councils and each union council consist of numerous areas. Currently total number of UC seats are 274.

*****

Lahore Profile

Demographics	
Population	12 million
Police Strength	27,146
Area	1,772 Sq Km
Annual Crime (2016-17)	71928
Police : Population	1 : 442

*****

CAPITAL CITY POLICE OFFICE

The Capital City Police Officer (CCPO) Lahore supervises the overall functions of Capital City Police, Lahore. The primary functions are prevention and detection of crime & maintenance of public order. In the new security paradigm shift, the security of public places, events, ceremonies and important personalities (VVIPs) has also taken priority. With three principle staff officers i.e. SSP Administration, SSP Internal Accountability Division and SP Legal, CCPO is the principle accounting officer for Lahore Police. CCPO operates through four major wings three headed by an officer of the rank of DIG and one headed by SSP. They are DIG Operations, DIG Investigation, DIG Security and Chief Traffic Officer. An important aspect of CCPO's job is to supervise the personnel management and resource management of Lahore Police.

History of Lahore Police

a. 1898 Lahore District established

b. 1916 Police force of the district was controlled by one SP with two DSsP

c. 1972 Lahore District was divided into two police Divisions i.e. City & Cantt:

d. 1991 Sadar Division established

e. 1992 Model Town division established

f. 2002 Establishment of CCPO, Office

g. 2002 Investigation and Operations separated

h. 2006 Iqbal Town and Civil Lines divisions established

i. 2006 Constitution of Traffic Warden Force.

j. 2015 Constitution of Operations Rooms in Model Town & City Divisions.

k. 2016 Constitution of Dolphin and PRU.

l. 2016 Establishment of Front Desks at Police Stations

*****

LAHORE POLICE ORGANIZATIONAL CHART

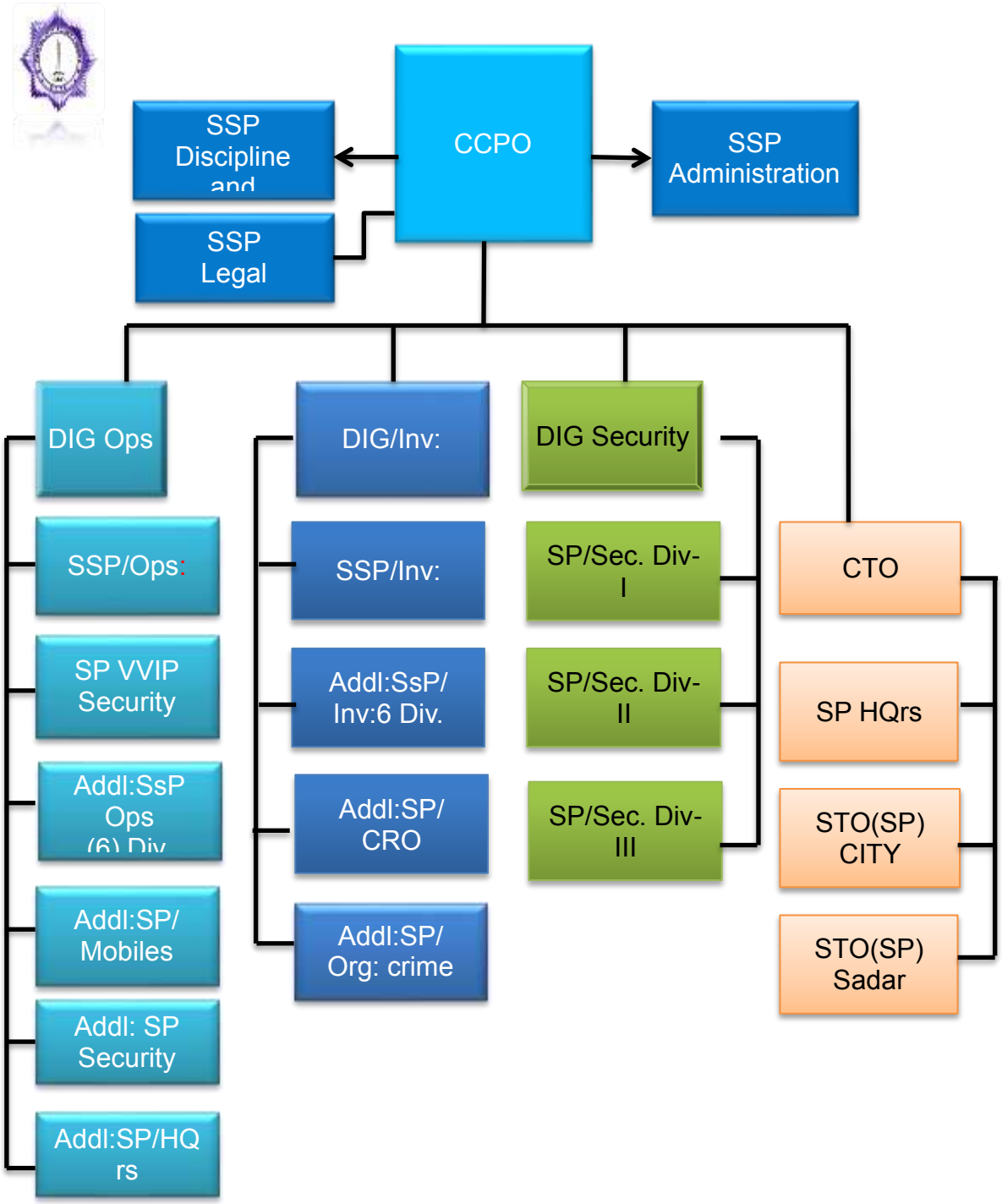

Establishment

CCPO	
DIGs	3
SSPs	6
Divisional Ssp Ops/Inv	6/6
Sub-Divisional Police Officers	35
Station House Officers	84
In-charge Investigation	84
Admin Officers/Ops & Inv:	84

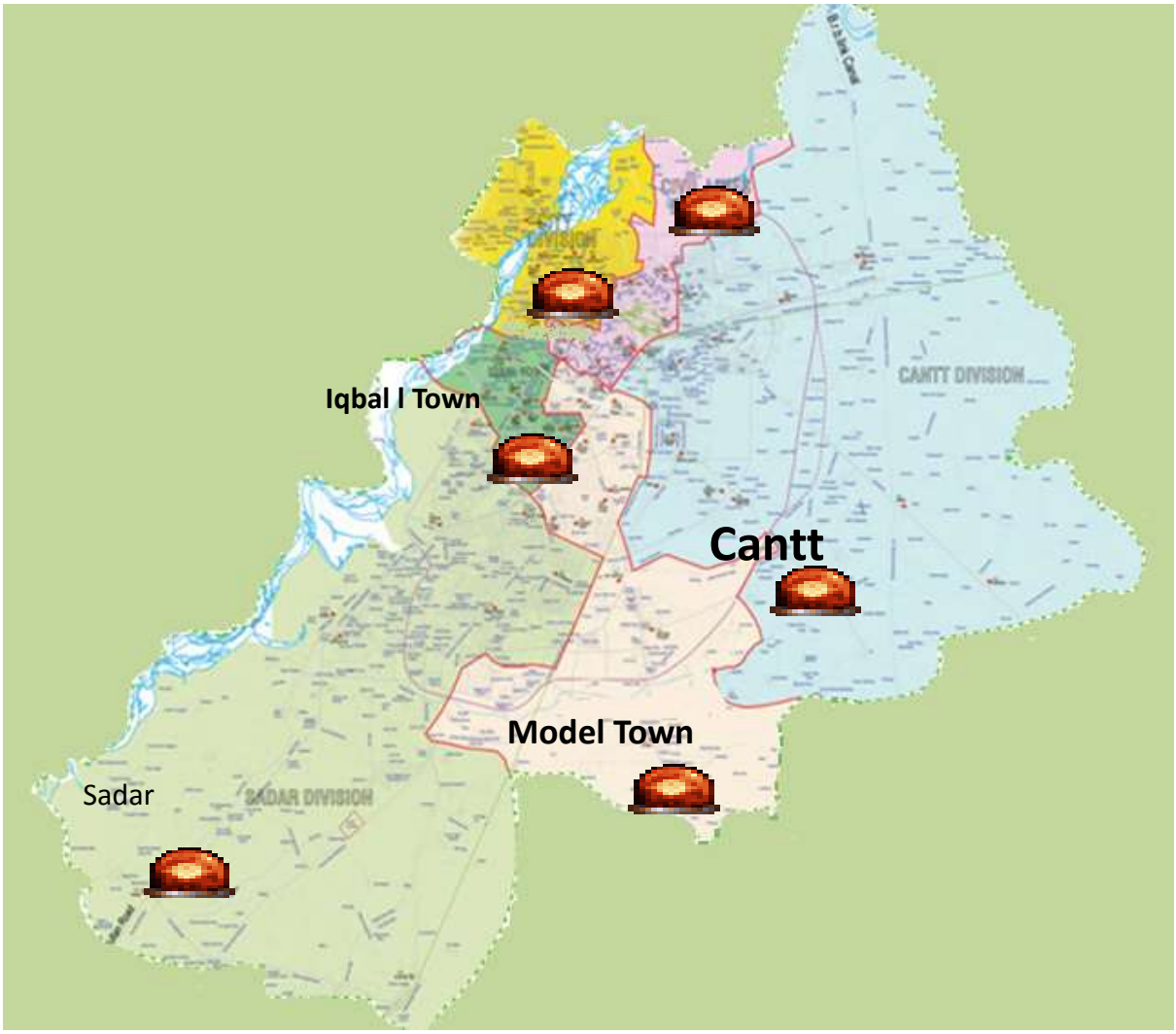

Distribution of Available Strength of Capital City District Lahore

Sr. No	Name Division, Wing Branch	Present Strength					Total		Total Strength
		Insp:	SI:	ASI:	HC:	Const:	Upper	Lower	
1	City Division	9	102	121	248	1185	232	1433	1665
2	Civil Lines Division	5	41	69	111	614	115	725	840
3	Cantt. Division	7	74	108	214	1013	189	1227	1416
4	Model Town Division	6	60	80	146	803	146	949	1095
5	Iqbal Town Division	4	31	73	78	510	108	588	696
6	Sadar Division	6	57	97	158	888	160	1046	1206
Total		37	365	548	955	5013	950	5968	6918
7	Mobiles Squad	4	34	125	189	1420	163	1609	1772
8	Flying Squad (VVIP Security)	2	10	13	27	476	25	503	528
9	Office Staff SP/Security(Sec: Branch)	2	11	11	34	132	24	166	190
10	POLICE LINES	56	227	308	639	5314	591	5953	6544
11	Office Staff DIG & SSP/Ops. & Facilitation Center Gulberg	2	2	22	30	121	26	151	177
12	Legal Branch Ops. Wing(Naib Courts & Tameel Staff)			6	19	143	6	162	168
13	Drivers (Excluding Police Lines)				25	977	0	1002	1002
G.Total Operations Wing		103	649	1033	1918	13596	1785	15514	17299
14	Investigations Wing	70	441	514	626	2319	1025	2945	3970
Miscellaneous									
15	Security Division	22	76	72	163	883	170	1046	1216
16	Elite Force Serving in District Lahore	0	12	10	365	616	22	972	994
17	Office Staff CPO	4	2	3	11	29	9	40	49
18	Office Staff CCPO/Security Duty	11	13	21	1	107	45	148	193
19	Courses (Advance, Upper/ Lower/Inter:/Recruit /Elite)	3	62	129	0	6	194	6	200
20	N.A.B		3	2	2	13	5	15	20
21	L.P.R.		1	4	2	12	5	14	19
22	Martyrs	1	32	27	24	180	60	204	264
23	Temp: SPU					86	0	86	86
24	UN-Peace Mission						0	0	0
Delphine Squad		6	15	9	9	554	30	563	593

Total Miscellaneous	47	216	277	608	2486	540	3094	3634
Insp: Legal	7				7			7
Grant Total Strength	227	1306	1824	3152	18401	3357	21553	24910

Statement of Police Strength of Lahore District

Sr No	Description	Insp:	Insp: Legal	SI	ASI	HC	FC
1	Sanctioned Strength	229	51	1371	2015	3589	19680
2	Present	220	7	1306	1824	3152	18401
3	Difference	-9	-44	-65	-191	-437	-1279

*****

ADMINISTRATION

SSP/Administration, Lahore.

SSP/Administration being the principal staff officer of Capital City Police Officer, Lahore, is responsible for the management of financial, human and logistic resources of Lahore Police. He conducts all official correspondence on behalf of Capital City Police Officer, Lahore. Personal management and procurement are his important functions. SSP/Administration is also responsible for the asset management of Lahore Police, supervision of construction, maintenance of all police buildings and new schemes.

Internal Accountability Division:

Senior Superintendent of Police; Internal Accountability Division (IAD).

The Senior Superintendent of Police Internal Accountability Division (IAD) is the principal staff officer of CCPO Lahore. He maintains discipline of entire police force of Lahore comprising of operations, investigations, security and traffic. He conducts inquiries into the complaints of corruption, misconduct and inefficiency against police officials. In addition to the walk-in complainants, he conducts enquiries marked by CCPO Lahore; IGP Punjab, Ombudsperson; ACE and Courts.

He conducts all official correspondence on behalf of Capital City Police Officer, Lahore except for those related to administration. The supervision of Inspection Cell and Citizens feedback Cell are his important functions. He is also the focal person of Lahore police for media, and Drug Free City Project, Lahore.

Legal Affairs Division:

The Division prepares comments on representations, appeals, writ petitions etc. and submit reports before the Superior Judiciary such as the Supreme Court and the High Court, and is also responsible for filing of appeals and review petitions against judicial orders and judgments. It also prepares and submits comments and reports to the Supreme Court of Pakistan in Human Right Cases, based on the information received from Operations and Investigation Wings.

The Division also files, with the approval of the CCPO, Lahore appeals challenging PST decisions before the Superior Judiciary. In the year 2016, the details of PST is as under:-

1st January 2016 to 31 December 2016

Received Appeals of 2016	Total Decided 199				Pending in PST	Moved to IGP for CPLA
	Accepted	Dismissed	Remanded	DNP		
240	69	70	145	16	350	55

The Division also receives and implements directions from the Courts of Sessions and the lower judiciary ensuring appearance of investigators and production of evidentiary material and record before those forums. It also deals with directions regarding the registration of cases and change of investigation.

Apart from litigation and petitions directed against the police department, there are also cases where civil suits have been filed against it. The Division also responds in those civil suits on behalf of the CCPO. The Division also ensure the implementation of order passed by ASJ/Ex-Officio Justice of Peace on petitions u/s 22-A&B.

The Division also deals with departmental appeals filed by the Police Officers/Officials of Capital City Police, Lahore before the IGP, Punjab against the order of CCPO related to grant of promotions and award of punishments. In the year 2015, almost 268 departmental appeals were received in this Division from the IGP, Punjab, in which comments were prepared, got signed and sent to the CPO. In the first six month of year 2016, almost 130 departmental appeals were received in this Division from the IGP, Punjab, in which comments were prepared, got signed and sent to the CPO.

*****

GOALS/TARGETS

Operational Goals

i. Maintain Public Peace and Order.
ii. Constitution of Beat Committees.
iii. Establishment of Reconciliation Committees.
iv. Drive against Criminals and Fugitives.
v. Zero Tolerance for Counter terrorism, Sectarianism and Extremism.
vi. Security of key installations, foreigners, and dignitaries.
vii. Free and prompt registration of cases.
viii. Fair and speedy investigations.
ix. Prevention of Crime.
x. Contingency plan for meeting emergencies.
xi. Prompt and professional response in calls for service.
xii. Promote police-public partnership.
xiii. Develop performance indicators and monitoring mechanism.
xiv. Up-gradation of police infrastructure.
xv. Model Police Stations.
xvi. Facilitation Centers.
xvii. Modern Communication Applications & Computerization.

Administrative Goals

i. Improvement of police image (*Thana* Culture).
ii. Community policing.
iii. Redressal of public complaints.
iv. Internal accountability against corruption and abuse of authority.
v. Emphasis on discipline, training and capacity building.
vi. Welfare and incentives for the force.
vii. Promote merit and fair-play in internal administration.
viii. Accessibility to force and redress of their problems.
ix. Financial Discipline.
x. Merit and fair play in recruitments, postings and promotions
xi. Emphasis on discipline, training and capacity building
xii. Welfare of junior ranks

xiii. Incentives and rewards for good performance

xiv. Promote team work for success

*****

ACTION PLAN FOR OPERATIONAL GOALS

Maintain Public Peace and Order

i. To eradicate the crime & criminals especially in the congested/residential areas intensive patrolling is being carried out.

ii. Especial pickets/*nakabandies* are being arranged on different places of entry and exit places of the city.

iii. Constitution of Dolphin, PRU & Special Trained Anti Right force to deal with the protesters.

iv. Constitution of Citizen Police Business Liaison Committee to redress the issues of business community amicably.

v. Effectively use of intelligence information to response quickly to an incident.

vi. Minimum and necessary use of force in dispersing an unruly mob or tackling a violence-prone situation.

vii. Close liaison with Peace, *Muhafiz* & Reconciliation Committees for maintenance of peace and order.

viii. Establishment of Ops Rooms in SsP Ops Offices to monitor law & order situations; shall continue with the same.

Drive against Criminals and Fugitives

i. To raise the good image of the police in the eyes of general public special efforts are afoot, in this regard vigilant eye is being kept on the criminals/bad characters of the area. To control the rising ratio of crime targets have been given to each police officer regarding to arrest the POs/TOs & CAs.

ii. Patrons of criminals and men of influence harboring absconders are special target of Lahore Police in order to ensure rule of law.

iii. Hot Pursue of Target Offenders and Absconders will be carried out.

iv. Action u/s 87/88 Cr.PC will be taken against Proclaimed Offenders.

v. Special *naka bandi* and Checking Points will be established at different locations for the arrest of criminals.

vi. Enhance methods of information sharing to encourage community to report criminals.

vii. Specials Teams be formed to collect intelligence/information as well as arrest of criminals.

viii. Geo Tagging of the houses of criminals/ target offenders will be carried out.

Criminal Record Office (CRO).

i. CRO is basically a supporting unit for crime investigation. It was established to help the investigator in tracing out the criminals of property cases through their modus operandi. With the passage of time and as the modus operandi of criminals have become more sophisticated and multidimensional, the CRO branch has also transformed.

ii. In short, we can safely say that there is a paradigm shift from manual methodologies of tracing crime to computerization and usage of various electronic devices.

Monitoring by Appling modern devises.

i. CRMS – Criminal Record Management System.

ii. SMIS – Sketch Making Imaging System

iii. MTMIS – Motor Transport Management Information System.

iv. SRVMS – Stolen and Recovered Vehicle Management System.

v. VERISYS – NADRA Verification System.

vi. Mobile Forensic Lab.

vii. Monitoring of Jailed persons Release.

viii. AFIS – Automated fingerprint Identification System.

ix. PROMIS – Police Record Office Management & Information System.

x. Mobile Phone Data.

xi. GSM Testing System.

CRMS AT DIVISIONS

i. Presently CRMS is installed at CRO, 06 investigation divisions & 02 units of Organized Crime

ii. These units are provided:

   a. Computer System with related all accessories & Software

   b. Digital Cameras, Memory Cards, Tripod Stand

   c. Digital Fingerprint Scanners

   d. Scanner

   e. UPS with Batteries

   f. Trained Staff

   g. Divisional Identical Background Flex, Scale

   h. Fingerprint rollers

i. Live access to Criminal Database Server at CRO

(Access is restricted to dedicated Static IPs only)

Counter Terrorism, Sectarianism and Extremism.

i. Working with community and allied law enforcement agencies and partners, to be creative in our approach to keeping the City safe from terrorism.

ii. Engaging with groups and individuals to prevent them from turning to terrorism or extremism.

iii. Quick response to a terrorist incident by regularly testing own plans.

iv. Enhance methods of information sharing to encourage community to report suspicious behavior.

v. Partnership with the District Administration to enhance security measures across the City.

vi. Use of intelligence and analysis to target the deployment of resources to detect, deter and disrupt terrorism.

vii. Make full use of existing and emerging technology, such as CCTV Cameras and Panic Alert System.

viii. Ensure zero tolerance against anti-state & anti-social elements who promote sentiments of hatred against different sects and country.

ix. Activities of 4th Scheduler, ATBs, RAPs, RGBs and religious extremists are particularly kept under close watch.

x. Take action under Foreigner's Registration Act against Afghan refugees / nationals.

xi. Place all mischief mongers in 4th Schedule.

Security of Key Installations, Foreigners and Dignitaries.

i. Special Protection Unit is being established for the security of key installations and foreigners in order to avoid any untoward incident.

ii. Security arrangements for the key installations, important buildings and for the foreigners.

iii. CCTV Cameras are installed on the entry/ exit points.

iv. Regular checking of such security arrangements are ensured by Senior Police Officers.

v. A liaison with concerned administration is maintained for effective provision of security cover.

vi. Police officials deployed on duty are adequately briefed to remain alert and take positions at vantage points.

vii. Intelligence based combing/search operations are being carried out in the surrounding areas.

viii. Proper search and sweeping of the buildings are ensured on regular basis through Special Branch.

ix. Night traveling by the foreigners is discouraged.

x. Coordination on security matters with Armed Forces and Intelligence Agencies.

Free and Prompt Registration of Cases.

i. Appointment of Admn: Officers/Ops: to redress the public grievances.

ii. Appointment of Senior & Junior Police Assistants to computerize complaints, police record & online complaint management system.

iii. Establishment of Citizen Feedback Cell, working under the direct supervision of SSP/IAD, Lahore, with the intention of bringing dynamic change in "Thana Culture" and create goodwill of police, for registration of FIRs on the calls received on 15.

iv. Reporting Rooms in all police stations are established where each application is registered with a number & date.

v. Complaint boxes, dedicated telephone complaint line and online complaint system, for monitoring registration of cases and public feedback.

vi. Registration of cases upon rescue calls.

vii. Complainants will be regularly attended by CCPO, DIG/Operation, Investigation & Divisional SsP for redressal of complaints.

viii. Open Sessions will be held regularly to redress public complaints.

ix. Strict action will be taken against the SHOs for not registering FIRs timely.

Fair and Speedy Investigations.

i. Appointment of special trained SIs as Admn: Officer/Inv:.

ii. DIG/SSP Investigation will ensure fair and prompt investigations.

iii. Special Crime Scene Units are developed for evidence collection labs with latest equipment at Circle Levels.

iv. Information regarding Mobile Subscriber's data, Call Detail Record, IMEI Tracking and location, is provided to the IOs for speedy Investigation purposes.

v. Investigation of heinous offences will be accorded highest priority.

vi. DIG/Investigation will hold monthly meetings to review and monitor investigations.

vii. The meetings of the Standing Board will be held regularly for the change of investigation.

viii. Interim / incomplete *challans* will be submitted before trial courts within prescribed period.

ix. Posting of specialized I.Os in homicide cases.

Prevention of Crime.

i. Special measures have been adopted by conducting effective patrolling and by the presence of police among general public.

ii. Continue to be innovative in our approach to reducing crime, targeting crime hotspots and known offenders.

iii. Maintaining and building relationships with community to save the city from criminals.

iv. Continue use of intelligence effectively to identify crime and disorder hotspots.

v. Launch specific targeted operations to address emerging challenges and provide quality-focused investigations with high quality evidence to support successful prosecutions.

vi. Ensure that our patrolling strategies offer re-assurance to our community.

vii. Ensure that victims can easily report crime and that once reported; victims will receive a professional response and are regularly updated.

viii. Maintain a focus on incidents of Dacoity, Robberies, and Kidnapping for ransom.

ix. Respond swiftly to calls for assistance, maintaining some of the fastest response times in the country.

x. Check criminal record of previous three years; identify gangs of robbers and auto-snatchers and re-arrest them; get their bails cancelled and prosecute them successfully.

xi. Act as an arbitrator to resolve conflicts between arch enemies and take preventive action against them.

xii. Revive *thekri pehra* in rural and *chowkidara* system in urban areas.

xiii. Enforce Shop Security Ordinance in its true sense.

xiv. Monitoring of Jail released offenders.

Prompt and Professional Response in Calls for Service.

i. Rescue 15 City Lahore would be a model response Centre for citizen's calls for service or information. Lahore Police will reach the door steps of citizens between 5 to 10 minutes.

ii. A Police Ambulance to invariably be stationed at Rescue 15 Centre helping respond in cases of attack or medical emergencies.

iii. Stolen / snatched vehicles data is being stored in Rescue 15 Centre for professional input to patrolling officers or investigators.

iv. Emergency response mechanism in case of gruesome acts of terrorism, law and order situations or natural calamities to be developed in Rescue 15 Centre.

Promote Police-Public Partnership.

i. Responsive and work in coordination with Public organizations.

ii. Working with NGOs in creating awareness about policing priorities and promoting public tranquility.

iii. Using social/electronic/print media for public awareness and coordination.

iv. To adopt a transparent and media-friendly approach to reporting crimes and disseminating information to public about incidents or events.

v. Truth is our savior.

vi. Not to be selective in disseminating information. Be open and across the board.

Develop Performance Indicators and Monitoring Mechanism.

i. Monthly Crime Meetings will be held to evaluate performance and monitor it regularly on the basis of operational and administrative priorities set forth in this Annual Policing Plan.

ii. Monthly SsP Meetings be held to follow up implementation of decisions of the Crime Meetings.

*****

ACTION PLAN FOR ADMINISTRATIVE GOALS

Improvement of Police Image (*Thana* Culture)

i. Posting of Admn Officers / Operations & Investigation
ii. Appointment of Senior & Junior Police Assistants to computerize complaints, police record & online complaint management system.
iii. Posting of SHOs and *muharrar* will be on merit after test and interview.
iv. Behavioral Change Course will be conducted.
v. SOPs for public dealing will be chalked out.
vi. Complaint boxes, open *kachahries*, Public meetings will be held for public feedback.
vii. Strict action will be taken on misbehave/corruption complaints.
viii. Quick response will be assured.
ix. Night deliberations on daily basis by the SsP/DSsP/SHOs to resolve the issues at police station level.
x. Introduction of ADR system

Community Policing.

i. A special attention is given for the promotion of community policing on police station level and *masahlaty*/peace committees have been established.
ii. Treat public fairly with dignity and respect ensuring fair access to our services.
iii. Provide public with information so they know their dedicated neighborhood police teams are, where they are based, how to contact them and how to work with them.
iv. Regular public meetings to access public priorities, at least once a month.
v. Provide public with updates on police performance, local crime and policing issues.
vi. Focus on the needs of community and listen and responds to their policing issues.
vii. Improve performance by using feedback of public.
viii. Use ‘social media’ such as ‘Twitter’ and ‘Facebook.’

Redressal of Public Complaints.

i. Helping desk/counters have been placed in every police station for the redressal of the public complaints.
ii. Complaint Management System has also been established in CCPO Office, DIG/Operations & Investigation Office, to redress the grievances of the public at the earliest.

iii. Every complaint, either false or true, will be responded to by telephone call or letter (time limit 07 days).

Internal Accountability against Corruption and Misuse of Authority.

i. Success of any organization based on its discipline for that purpose, to maintain discipline and better accountability.

ii. Internal Accountability Division established under the supervision of SSP, at CCPO Office to enquiry the complaints filed against police officers/officials.

iii. Zero tolerance against corrupt practices and misuse of authority.

iv. Issuance of Code of Conduct for Police.

Emphasis on Discipline, Training and Capacity Building.

i. For training of police officers a training school has been established in District Police Lines, where different short training courses are being arranged.

ii. For the awareness of law & importance of public dealing, special lectures are being delivered to the police officers/officials by the senior law officers/police officers.

iii. SsP will ensure that officials do not break chain of command.

iv. Training and capacity building of officials will be given priority.

v. Professionalism, expertise and specialization will be developed at all ranks of police.

Welfare and Incentives for Police Service.

i. Rejuvenation and streamlining of welfare schemes of Lahore Police, especially Combined Police Hospital, Petrol Pump.

ii. Enhancement of welfare grants in areas like medical treatment, education and for the welfare of '*shuhadas'* family.

iii. Construction of Mess, Common Room, Gymnasium and Barber Shop in Distt. Police Lines, Lahore

iv. Renovation of Firing Range in Police Lines, Lahore.

v. Installation of 2 ATMs in Police Lines, Lahore.

vi. Construction of Badminton Court in Police Lines, Lahore.

vii. Wrestling, kabadi, karate and weight lifting matches arranged in Police Lines.

viii. Cultural Show in Police Lines Lahore.

ix. Construction of P.Ss Naseerabad (50% completed), Garden Town (50% completed) and Akbari Gate.

x. Construction of Married Officers Flats (MoF) at Investigation Headquarters (75 % Completed).

xi. Construction of 5 Barracks and 1 Lavatory in District Police Lines (Complete)

xii. Repair/Maintenance of City Kotwali Building (80 % Completed)

xiii. Construction of Hospital at Police Lines (Completed).

Promote Merit and Fair-Play in Internal Administration.

i. Promotions on merit along with merit-based promotion examinations.

ii. Posts in Lahore Police will only be filled on basis of qualification, efficiency, experience and integrity of the officer/official.

iii. Lahore Police Officers will take pride in uniform and their service.

Accessibility to Force and Redressal of Problems.

i. Weekly Orderly Room in Police Lines.

ii. Weekly Orderly Rooms by Town SsP.

iii. Liberal policy on leave.

iv. Personal problems of all ranks to be attended and given priority.

Up gradation of Police Infrastructure.

i. Existing buildings to be repaired and upgraded.

ii. Living facilities for officers will be up to the mark.

iii. Police vehicles will be repaired.

iv. New police station buildings shall be constructed.

v. New Police vehicles shall be purchased.

vi. Operations Rooms equipped with modern communication system are being established in the offices of Divisional SsP, which are directly linked with the Police Stations.

Model Police Stations.

i. Graduate ASIs & SIs were appointed as Admn Officers in Operation & Investigation Wings, in Lahore.

ii. Police record is being computerized through Senior Station Assistants.

Facilitation Centers.

A. Facilitation Centers are established to provide facilities to the public through one window Operation.
    i. Character Certificate
    ii. Servant Verification
    iii. Vehicle Verification
    iv. Documents Verification
    v. Report for Missing Documents
    vi. Report of Missing Vehicle
    vii. Learner Driving Permit
    viii. Copy of FIR
    ix. International Driving License
    x. Duplicate Driving License.
    xi. Renewal of Driving License.

Modern Communication Application.

i. Implementation of Android Application for Crime Mapping.
ii. Lahore Police Dynamic Website.
iii. Police Personnel Database and Service Cards for Security.
iv. Online Complaints through web and Complaints Tracking.
v. Facebook Page management for the information and welfare of public
vi. Panic Alert System
vii. Police Record Automation

Financial Discipline.

i. Lahore Police realizes value for money and will utilize financial resources as mentioned in budget with utmost professional commitment and integrity.
ii. Strict financial discipline will be enforced.
iii. Emphasis will be on purchase of equipment/stationary in accordance with the PPRA Rules.

City Traffic Police Lahore.

i. City Traffic Police has been launched with an aim to introduce a new traffic system along with redressal of grievances of general public regarding corruption. It consists of 01-CTO, 02-STOs (City & Saddar), SP/HQs. 14-DSsP/Traffic Officers along with essential manpower. This unit is responsible for smooth flow of traffic, issuance of driving licenses, awareness of citizens regarding traffic laws.

ii. 24 Hours FM 88.6 transmission as well as Help Line service 1915 is working to guide and educate general road users.

iii. Special Education Unit is educating the road users regarding traffic rules and regulations and arranges the lectures, seminars and walks as well.

iv. Speed Gun Unit is taking strict action against over speeding.

v. Maintaining the traffic rules and discipline, Line/Lane Discipline.

vi. Clear passage way for VIP/VVIPs routes duties.

vii. Ensuring the amicable comportment with general road users.

viii. Making more strengthen coordination with allied departments for maintaining the smooth flow of traffic.

ix. Staggered timing of schools and offices may convenient to general road users as avoid traffic mess on road.

x. Four Learner and Licensing Vans are introduced, which are providing door to door facility for the issuance of driving license.

xi. Licensing Section has been established at Arfa Karim IT Tower, which is working seven days a week to facilitate general public.

Security Division.

i. Security Division, Lahore was established in 2008 within Capital City Police, Lahore. It is headed by an officer of the rank of DIG under the overall supervision of CCPO, Lahore. DIG Security is assisted by three SsP and allied staff. Security Division is responsible for the security of Prime Minister of Pakistan, Chief Minister's offices, secretariat and residences at Lahore. Security Division also looks after the security of GOR-I.

Future plans and targets

Strategically, the Capital City Police intends to be an efficient law enforcement organization that works even-handedly, transparently and professionally to provide a service to the community for maintaining order and preventing as well as detecting crime. To achieve this long-term goal, there are several short to mid-term objections and targets that the Capital City Police intends to meet. Most of these objectives and targets are related to on-going activity.

i. To transform the Capital City Police from a force into a service.

ii. To continue the commitment to police reform and to implement the police Order in true letter and spirit.

iii. To prepare and implement annual policing plans as tools of planning, implementation, monitoring and evaluation.

iv. To develop its human resource to the level required.

v. To introduce modern management practices and new technologies for better financial and human resource management.

vi. To introduce a new human resource management regime for optimum utilization of resources: Development of better procedures and standards (including performance indicators and monitoring mechanism) for recruitment, training, posting and transfer, performance evaluation and promotion.

vii. To enhance professionalism and specialization among all ranks and for all functions.

viii. To build better and closer relationships with the community for an improved image.

ix. To maintain close public contact of supervisory officers through open Sessions during daily hours.

x. To ensure free registration and quality investigation of cases.

xi. To enlist community support for prevention and detection of crime.

xii. To work pro-actively for prevention crime and apprehension of criminals. Develop a criminal intelligence and statistical analysis capability.

xiii. To maintain an effective political intelligence capability to keep the government informed of expected public order events and situations.

xiv. To Develop and maintain a professional anti-riot capability with clearly defined rules of engagement and protocols for use of force.

xv. To continue the focus on anti-terrorism.

xvi. To develop and maintain an effective traffic management capability.

xvii. To promote traffic discipline and road safety by rigorous enforcement and creating awareness of traffic rules and ethics.

xviii. To maintain the infrastructure, transport, equipment and arms in the beck state of repair and operational preparedness.

xix. To maintain and operate Rescue and other emergency police respond services.

xx. To help the Government maintain peace and harmony during *Muharram* and other day of national importance and special occasions.

xxi. To work with civil society and media in creating awareness about policies priorities and promoting public peace.

xxii. To assist court with its work.

xxiii. To evolve such a mechanism in order to motivate local and other diatribe police to arrest most wanted criminal involved in heinous crime.

Working System in Operation Room

1. **Short Messaging Broadcast System**

People can send SMS on this service regarding any crime, police complaint or any other complaint. Operator calls the complaint and relative police officers to solve issues.

2. **Police Reporting System:**

Every complaint registered in police station, is monitored by this system, A complete detail of application can be viewed. No complaint could stay under the carpet without action.

3. **Rescue 15 Systems:**

This system contains the 15 call log from 12 O' night to next 12 O' night. 15 call locations are pinned and a crime map of whole Lahore based on 15 calls created. Caller detail, call record, relative officer and location are viewable in this system.

4. **Vehicle Monitoring:**

Trackers have been installed in every police vehicle of whole division that help to shoe their locations. Every police vehicle is monitored 24/7 from the control room.

5. **POLCOM FIR information System:**

When FIR registered, after processing is monitoring through this system. Complete detail regarding FIR and its proceeding can be viewed in this system. Operator calls the complaint and tries to satisfy theirs issues.

6. **Crime Intelligence System:**

This system saves the records of Call Data Record of Tracked mobiles. Many analyzing techniques are available in this system

7. **Video Conference:**

SP make video conference on daily basis at 5pm to 6pm with admins, SHO's and In-charge Investigations and discusses the important cases.

8. **Video Surveillance System:**

Cameras are fixed on the Police vehicles that are monitored from this system. By this system, we are monitoring routs, streets and other important places by staying in control room.

9. **Tenants Registration System.**

Every Tenant came in the area, being registered by beat officers and admin officers using application that are installed in their android mobiles. Name, number, picture and other related recorded are saved in this system.

10. **Suspects and criminal Data Management:**

Each Suspicious or criminal person caught or observed by police, are registered in this system. Police officer enter their name, contact number, picture ,address etc. in by using android application that are installed into their mobiles.

11. **Guest Management System:**

This system contain the record of every guest, Traveler came in PS area. By using android application their data are entered that includes their names, contact number, Guest house or Hotel name and their owner etc.

12. **Police Station Visitor Management system:**

Every Person came into police station with any mean are being registered in this system. That visitor could be Admin officer that receive the visitor are entering this record by using android application.

13. **Beat Management System:**

As the whole Lahore is divided into beat system, this system contains the detail of beats in our division. Important places, churches, institutions, crime pockets, suspicious places and other complete details of beats saved in this system.

14. **Emergency Alarm System(EAS):**

U-fone SIMS is assigns to the churches, media houses, banks and institution. Some detail of assigned persons is saved in our system. When they face any

criminal, suspicious or terrorist activity they just dial short code (*55#) and concerned department will contact them immediately.

15. **Proclaimed offender / targeted offender Data & Raiding Plan:**

This system contains all the record related to Proclaimed offenders (POs) and targeted offenders (TOs).

16. **Biometric Attendance & HR Management System:**

Biometric attendance devices are installed in the all Police stations. Police station staff are marked their attendance by this bio matric devices. Attendance and Human resource is monitored and Thiers attendance reports are generated on daily basis using this system.

17. **Automated Numbers Plate Reading Cameras (ANPR):**

Special Cameras are being installed on the check points that will automatically focus on number plate of vehicles and display their records.

*****

DEVELOPMENT SCHEME 2016-17.

Status of Police Stations (Total P.S =84).

Sr. No.	Status of Police Stations Buildings	Category	Total Police Stations
1.	Police Department (52)	New Buildings “A”	33
		Old Buildings “B”	11
		Dilapidated “C”	08
2.	Rented		14
3.	Other Departments		18
4.	Total Police Stations		84

Detail of Police Stations
Land Owned by Police Department (Good-33)

Sr: No.	Name of Police Station	Year of Construction	Area	
			Kanal	Marla
1.	PS Muslim Town	1992	3	-
2.	PS Iqbal Town		2	17
3.	PS Model Town		10	-
4.	PS Mochi Gate	1994	2	13
5.	PS Rang Mehal		2	13
6.	PS Manawan		38	5
7.	PS Sarwar Road	1995	4	5
8.	PS Sabzazar		6	-
9.	PS Shahdara	1999	8	-
10.	PS Tibbi City	2004	12	3
11.	PS Baghbanpura	2008	5	-
12.	PS Manga Mandi		7	10
13.	PS North Cantt.		18	2
14.	PS Kahna		14	19
15.	PS Raiwind City		11	10
16.	PS South Cantt.		12	6
17.	PS Burki		7	1
18.	PS Defence "A"		3	19
19.	PS New Anarkali		4	11
20.	PS Hadiara		4	-
21.	PS Ghazi Abad		4	-
22.	PS Mustafabad		8	-
23.	PS Masti Gate	2012	2	15
24.	PS Ravi Road		1	19
25.	PS Garhi Shahu	2013	11	5

26.	PS Mustafa Town		3	19
27.	PS Lytton Road		1	16
28.	PS Defence “B”	2014	3	-
29.	PS Defence “C”		2	18
30.	PS Township	2015	9	-
31.	PS Naseer Abad	2016	1	18
32.	PS Garden Town		6	-
33.	Women Police Station	Housed in PS Lytton Road		

Detail of Police Stations
Land Owned by Police Department (Satisfactory-11)

Sr: No.	Name of Police Station	Area	
		Kanal	Marla
1	PS Naulakha (under Construction ADP 2015-16)	12	7 & 15 Feet
2	PS Mughalpura	53	13
3	PS Misri Shah	3	18
4	PS Lower Mall	8	8
5	PS Ichra	4	-
6	PS Race Course	5	2
7	PS Green Town	11	8
8	PS Ghalib Market	2	5
9	PS Gulberg	9	-
10	PS Q.G. Singh (under Construction ADP 2015-16)	Shifted in PS Garhi Shahu, Lahore	
11	PS Quaid-e-Azam Industrial Estate.	-	18

Detail of Police Stations
Land Owned by Police Department (Poor/Dilapidated-08)

Sr: No.	Name of Police Station	Year of Construction	Area	
			Kanal	Marla
1	PS Akbari Gate (under Construction ADP 2014-15)	1980	8	3
2	PS Badami Bagh (under Construction ADP 2015-16)	1980	5	1 & 16 Feet
3	PS Chung (under Construction ADP 2015-16)	1838	46	6
4	PS Old Anarkali (Addition/Alteration 2015-16)	1861	8	15
5	PS Civil Lines	Shifted in PS Race Course	33	5
6	PS Yakki Gate	Shifted in	2	3 & 92

	(under Construction ADP 2015-16)	Dispensary		Feet
7	PS Lohari Gate (under Construction ADP 2015-16)	1986	2	17
8	PS Hair	1938	4	10

Detail of Police Stations
Housed In Rented Buildings (14)

Sr: No.	Name of Buildings
1.	PS Islampura PS Islampura (Inv)
2.	PS Gujjarpura
3.	PS Shadman
4.	PS Shalimar PS Shalimra (Inv)
5.	PS Hanjarwal
6.	PS Kot Lakhpat
7.	PS Gulshan-e-Iqbal (Approved in ADP 2016-17)
8.	PS Faisal Town /Ops: (Two Flats) PS Faisal Town (Inv) (Approved in ADP 2016-17)
9.	PS Shadbagh
10.	PS Millat Park
11.	PS Sanda
12.	PS Samanabad
13.	PS Mazang (Under Construction approved in ADP 2015-16)
14.	PS Gawalmandi (Under Construction approved in ADP 2015-16)

Detail of Police Stations
Housed in Other Department's Buildings (18)

Sr: No.	Name of Buildings	LAND OWNED BY
1.	PS Wahdat Colony	**PWD/Health Department** (Total Area 5 Kanal working in Health Deptt: Dispensary Building)
2.	PS Harbans Pura	**Provincial Government** (PS working in 4 room & 1 barrack constructed as Self-Help basis)

3.	PS Bata Pur	**Bata Factory** (PS working in Bata Factory)
4.	PS Nishtar Colony	**Provincial worker health welfare Board** (Toatal Area 2 Kanal 3 marla building construct as Self-Help basis)
5.	PS Johar Town	**Federal Government's Quarters** (PS is working in 4 Qtrs:)
6.	PS Satto Katla	**Wapda Housing Society** (PS is working in G-III, Block WAPDA Town)
7.	PS Sundar	**Land Provincial Govt:** Maruka waqf Imlaq (2 Kanal 7 marla existing building)
8.	PS Nawab Town	**Nawab Town Housing Society** (Total Area 9 Marla, PS working in 3 Rooms, a lock-up, wash room and a courtyard. Building construct as Self-help basis)
9.	PS Liaqatabad (Approved in ADP 2016-17)	**LDA** (PS working in 4 flats constructed by LDA)
10.	PS Nawan Kot	**City District Government** (Total Area of PS 6 Kanal 16 Marla. Building construct as Self-help basis)
11.	PS Shera Kot	**City District Government** (Total Area of PS 3 Kanal 3 Marla. Building construct as Self-help basis)
12.	PS Shafiqabad	**Forest Department** (PS is constructed as self-help basis now working near overhead Bridge Bati-Chowk)
13.	PS Lorri Adda	**MCL/Dispensary** (PS is working in Provincial Govt; Land total land 4 Kanal)
14.	PS Bhati Gate	**Archieve Deptt:** (PS is situated alongwith Bahatti Gate)
15.	PS Shahdara Town	**Railway** (PS is situated at Main G.T. Road near Machis Factory)
16.	PS Gulshan-e-Ravi (Approved in ADP 2016-17)	**LDA** (Total Area of PS 3 Kanal 19 Marla. Building constructed at Self-help basis)

17.	PS Factory Area	**Live Stock (Halla Milk)** (after vacating the rented building and shifted temporary)
18.	PS Data Darbar	Housed in the building owned by Auqaf department.

*****

ADMINISTRATION STANDARDS FOR POLICE STATIONS

There is a general complaint and perception that the grievances of the public at large particularly with regard to registration of criminal cases against the culprits are not redressed by the local police and the people have to knock at the doors of Senior officers and in most of the cases they have to file petition u/s 22-A 7 22-B Cr.P.C. for redressal of their grievances. In some cases even after clear order of the court, the criminal cases are not registered and ultimately the people have to file writ petitioners before the Hon'ble Lahore High Court, Lahore.

The matter has been given a thread bare consideration and it was observed that due to lack of interest of the senior officers at the level of circle/division, this important aspect goes unchecked due to which this has become a cause of concern. In view of above, following recommendations are submitted for good administration and measures to curb male administration in police stations.

I. As and when any complaint/application is received by local police in a police station, the same shall be promptly examined by the SHO himself and if it discloses the commission of a cognizable offence, a criminal case be registered as provided in section 154 Cr.P.C. under the relevant section of law. The FIR shall be sent to the in-charge investigation, who shall investigate the case u/s 156 Cr.P.C.

II. If the circumstances narrated in the application/complaint seems to be doubtful then the same shall be reduced into writing in the "Daily *Roznamcha*" and procedure shall be followed as provided in section 157/169 Cr.P.C. for the disposal of the case.

III. If the application given by any aggrieved person does not disclose the commission of a cognizable offence then the same shall be recorded in the "Daily *Roznamcha*" (Register No.2) and the aggrieved person be advised to knock at the door of the court and a copy of the same shall be sent to learned court of *Illaqa* Magistrate for information as required u/s 155 Cr.P.C for further investigation in the light of the directions of the court.

IV. If the aggrieved person knocks at the door of the learned court of Sessions Judge (Ex-Officio Justice of Peace) for getting a criminal case registered against the culprits, the learned court seeks comments from the local SHO, it shall be ensured by the concerned SHO that proper/appropriate comments are submitted in the court. They should avoid sending "Routine reports that the application has not been received, as and when the same is received legal action shall be taken. Before submission of the comments in Court, the DSP/SDPO shall also ensure that the same are properly prepared".

V. If even after perusing comments of the local police, the learned court orders for registration for a criminal case on the complaint then order must be complied with promptly.

VI. In case of non-compliance of the provision of law as well as court's order, the SHO concerned and DSP, both should be held responsible. Similarly Divisional SsP should also be responsible for compliance of provision of law as well as court's order.

VII. The Divisional SsP should initiate disciplinary action against the delinquent police officials regarding non-compliance of provision of law as well as court's order.

VIII. The DSP/Legal (Ops) shall act as focal person of Police. He shall establish close liaison with the Learned Courts and get compliance of the orders issued by the Courts.

IX. An accountability Division should also be established in the Tehsil & District levels to enquire into the complaints against the delinquent police officers regarding corruption, non-registration of cases, maladministration, misuse of official powers as well as defective investigation.

X. Special Operations Rooms in the offices of Divisional SsP, DPO, CPO, CCPO and RPO Office, should be established to monitor the activities of the Officials/Officers of the Police Stations.

XI. Beat System should be activated at the Police Stations level to prevent and detect the crimes as well as criminals.

XII. Community based policing at police station level, Tehsil level/Divisional Level, DPO level, CPO level, CCPO level and RPO level, should be established such as Citizen police liaison committees and community police councils comprising of representatives of local union councils, district councils & notables of the area.

XIII. All the FIRs as well as other record of the police station should be computerized and linked to the main operation room at division level, DPO level, CPO level, CCPO Level and RPO level.

Investigation of the Cases:

After the registration of case, the investigation of the case is the most important aspect of policing. For the fair, just and merit based investigation of the cases following suggestions are submitted:

I. Separate and Specialized Units should be established at P.S Level to investigate the cases such as Homicide Units, Crime against property, Crime related theft of Vehicles Unit, Financial Crimes Unit and Forgery/forged documents Unit.

II. Expert and specialized police officers/officials should be deputed at P.S level under the supervision of concerned DSP/SDPO of the circle. Their only job should be to investigate the cases of Homicide, Accident,

Dacoity/robbery cum murder, Crime against property, Crime related theft of Vehicles, Financial Crimes and Forgery/forged documents.

III. Training / Sub-inspectors, Admn Investigation Officers should be deputed at the PS level in Investigation Wing, to regulate the process of investigation and for conducting fair investigation. The same Admn Officer work as coordination officer with the high ups and try to resolve the issues of the complainants at P.S level.

IV. The courses related to use modern techniques for investigation should be introduced at police training schools, to improve the investigation capacity amongst the investigating officers.

V. All the progress of the cases regarding investigation should be computerized and linked to the main operation room at division level, DPO level, CPO level, CCPO Level and RPO level.

VI. The complainant should be intimated about the registration of the case and further progress about the investigation of the case through messages on his Mobile Phone.

VII. A close and continuous liaison should be established with the prosecutors to get guidance about the collection of evidence as well as preparation of police files/report u/s 173 Cr.P.C.

****

ANNUAL PERFORMANCE REPORTS

DIG/Investigation.

i. DIG/Investigation, Lahore, manages the affairs regarding the investigation wing of the Lahore Police assisted by one SSP/Investigation, Lahore, alongwith six Divisional SsP. Investigation Wing deals with all major crime of the city except for cases falling under the jurisdiction of local and special laws which are conducted by the Operations Wing. A Division is headed by SP/Investigation, a Circle by a DSP/ASP and Police Station by In-charge Investigation. There is also an Organized Crime Unit (CIA), headed by SP/CIA Lahore, assisted by 06 DSsP in their respective Divisions and other staff members including Inspector, SIs, ASIs, HCs and Constables Financial Crime Unit headed by one DSP and other staff is also working under SP/Organized Crime (CIA), Lahore. There is one Criminal Record Office which is headed by an SP assisted by staff of the rank of Inspectors, SI etc. The branch of PROMIS/PAFIS/Mobile Lab is also working under the command of SP/CRO & Computerization, Lahore. The Anti-Vehicle Lifting Staff (AVLS) and Anti Motorcycle Lifting Staff (AMCLS) is also working under the command of SP/CRO assisted by 02 DSsP, Inspectors, SIs, ASIs etc.

Performance of the Investigation wing, Lahore, during the Year 2015-16 (till 30.12.2016). All crime

Crime	2015	2016	Difference
All Reported Crime	83371	89518	+6147
Against Person	6344	6832	+488
Against Property	25139	27326	+2197
Miscellaneous	22743	26951	+4208
Local & Special Laws	29145	28399	-746

Murder

Year	Cases			Accused		
	Cases Reg.	Cases *Challaned*	U/ Inv	Involved	Arrested	At Large
2015	403	227	161	1027	530	497
2016	400	235	152	876	566	310

Kidnapping for Ransom

Year	Cases			Accused			Abductee			
	Cases Reg.	Cases *Challan*	U/ Inv	Involved	Arrested	At Large	Total	Recovered	Not Recovered	Killed
2015	9	8	1	41	30	11	9	9	-	-
2016	5	3	2	8	6	2	6	4	2	-

Dacoity/ Robbery with Murder

Year	Cases			Accused		
	Cases Reg.	Cases *Challaned*	U/ Inv	Involved	Arrested	At Large
2015	28	14	10	58	31	27
2016	18	11	7	49	31	18

Dacoity

Offence	Year	Cases Reg.	Cases *Challaned*	U/Inv	Accused			Property	
					Involved	Arrested	At Large	Stolen	Recovery %
Highway	2015	-	-	-	-	-	-	-	**-**
	2016	-	-	-	-	-	-	-	**-**
Bank/ Cash Van	2015	1	1	-	9	2	7	98045963	**2**
	2016	1	1	0	5	2	3	3754680	**21**
Jewelry Shops	2015	-	-	-	-	-	-	-	**-**
	2016	-	-	-	-	-	-	-	**-**
House Dacoity	2015	43	25	13	228	135	93	38365000	**23**
	2016	21	9	12	130	39	91	17875000	**20**
Others	2015	46	38	7	250	129	121	156416398	**30**
	2016	26	11	15	169	50	119	50543790	**68**
Total	2015	90	63	20	487	266	221	310548361	**11**
	2016	48	21	27	304	91	213	72173470	**54**

Robbery

Offence	Year	Cases Reg.	Cases *Challaned*	U/Inv	Accused			Property	
					Involved	Arrested	At Large	Stolen	Recovery %
Highway	2015	-	-	-	-	-	-	-	-
	2016	-	-	-	-	-	-	-	-
Bank/ Cash Van	2015	-	-	-	-	-	-	-	-
	2016	-	-	-	-	-	-	-	-
Jewelry Shops Robbery	2015	1	1	-	3	-	3	1100000	-
	2016	-	-	-	-	-	-	-	-
House Robbery	2015	391	96	156	872	222	650	661390520	2
	2016	222	62	103	49	140	359	122072000	9
Others	2015	3273	1258	909	6414	2802	3612	455327533	12
	2016	2783	1358	965	5895	3020	2877	368177497	19
Total	2015	3665	1354	1066	7289	3024	4265	1153856753	5
	2016	3005	1420	1068	6396	3160	3236	509603497	18

Vehicle Snatching

Types of Vehicles	Year	Cases			Vehicle		Accused		
		Cases Reg.	Cases *Challaned*	U/Inv	Snatched	Recovered	Involved	Arrested	At Large
Car/Jeep	2015	49	14	28	49	14	98	28	70
	2016	19	7	6	19	7	40	15	25
Motor Cycles	2015	589	237	200	589	237	1180	474	706
	2016	471	181	177	471	181	952	362	590
Others	2015	31	14	10	31	14	66	28	38
	2016	23	8	6	23	8	46	16	30

Vehicle Theft

Types of Vehicles	Year	Cases			Vehicle		Accused		
		Cases Reg.	Cases *Challaned*	U/Inv	Stolen	Recovered	Involved	Arrested	At Large
Car/Jeep	2015	1058	295	372	1058	295	1058	295	763
	2016	747	195	375	747	195	747	195	552
Motor Cycles	2015	4598	926	1813	4598	926	4598	926	3672
	2016	4012	1097	1562	4012	1097	4012	1097	2915
Others	2015	424	110	127	424	110	424	110	314
	2016	409	124	198	409	124	409	124	285

Police Encounters

Year	No. of Encounters	Criminals			Police	
		Killed	Injured	Arrested	Martyred	Injured
2015	43	48	5	38	1	14
2016	27	25	4	10	3	5

Arrest of Proclaimed Offenders

Year	Previous			Added			Arrested			Balance		
	A*	B**	Total	A	B	Total	A	B	Total	A	B	Total
2015	2308	23856	26164	1102	2544	3646	1947	10874	12821	1463	15526	16989
2016	1264	15393	16657	1465	2639	4104	2020	4782	6802	709	13250	13959

* POs of Heinous Crime
** POs of Minor Crime

Show Cause Notice / Departmental Enquires (01.01.16 To 31.12.2016)

Rank	Total Added	Total Decided	Total Pending
Inspector	18	15	03
Insp/STW	NIL	NIL	NIL
TW	NIL	NIL	01
SI	20	08	12
ASI	15	10	05
HC	01	NIL	02
Constable	20	10	10

Punishments (01.01.16 To 31.12.2016)

Rank	Dismissal/ Removal from Service	Compulsory Retirement	Reduction in Pay / Scale/ Rank	Withholding of promotion	Withholding of increment	Censure
Inspector	NIL	NIL	NIL	NIL	NIL	01
Insp/STW	NIL	NIL	NIL	NIL	NIL	NIL
TW	NIL	NIL	NIL	NIL	NIL	NIL
SI	NIL	NIL	NIL	NIL	01	01
ASI	NIL	NIL	NIL	NIL	02	02
HC	NIL	NIL	NIL	NIL	NIL	NIL
Constable	05	NIL	NIL	NIL	10	10

Implementation of National Action Plan Combing Operations (01.01.2016 to 25.12.2016)

No. of Search Operations	No. of localities where search operations conducted	No. of persons Questioned	No. of persons against whom case registered	Cases Registered under Sections				
				Foreign Act.	13/20/65	CNSA	Other	Total
10748	10527	603011	879	-	16	12	467	495

Action against Display of Arms

Cases Reg.	Licensed weapons used	Cases initiated for cancellation of licenses				Cases Reg. under 13/20/65
		K.Kov	Rifles	Guns	Revolvers/ Pistols	
272	-	-	-	-	-	272

Action Taken by Traffic Police under Traffic Laws (01.01.2016 to 25.12.2016)

Vehicles					
Without Number Plates	Unauthorized Green Number Plates	Unauthorized Number Plates	Unauthorized Flash Lights	Tinted Glasses	Impounded
42598	321	139265	18	16467	341

Cases Registered Against Illegal Afghan Refugees Under Foreign Act (01.01.2016 to 25.12.2016)

Cases Registered Against Illegal Afghan Refugees Under Foreign Act	Accused Arrested	Accused Bailed out	Accused Still in Jail
25	34	03	31

Action taken under New Laws (01.01.2016 to 25.12.2016)

Ordinance	Cases Registered	Accused arrested	*Challans* Submitted	Cases Decided	Convicted	Acquitted	Pending in Courts
Sound System (Regulation) Ordinance, 2015	367	474	313	153	130	23	160
Prohibition of Expressing Matters on Walls (Amendment) Ordinance, 1995	20	2	2	1	0	1	1
Information Of Temporary Residents Ordinance, 2015	3168	5566	2864	445	393	52	2419

Security of Vulnerable Establishments Ordinance, 2015	255	233	239	13	-	13	226
ARMS (Amendments) Ordinance, 1965	4165	4165	3785	250	216	34	3535
Hate Material Cases (295 TO 298-C PPC, SECTION 9 & 11-W ATA	15	16	6	-	-	-	6
MPO , 1960 As Amended In 2015	-	-	-	-	-	-	-

Security of Worship Places

Name	No. of worship Places	Deployment					Walk through gates	Metal detectors
		Police Officials			Private Security Guards	Volunteers		
		US	HC	FC				
Imam bargah	348	04	04	24	98	255	13	102
Churches	551	64	--	932	251	629	12	221
Gurdwaras	06	01	01	03	41	03	03	03
Qadiyani Bait uz zikar	29	19	05	84	28	34	06	21
Hindu Temples	02	01	--	01	--	01	--	--
Ismaili Jamat Khana	03	--	01	01	08	02	--	02
TOTAL	939	89	11	1045	426	924	34	349

Chines Security, Government or Private Projects,

Manpower Deployed.

Name of Project	Chinese working	Police			Ranger	Army	QRF	Escort Teams	Private Security	Askari Guard	Total Deploy-ment
		Distt.	SPU	PC							
Govt.	555	303	359	36	--	03 NLC	10	29 (19 District	122	09	871

								+ 10 SPU)			
Private	773	245	--	41	--	--	--	--	673	30	989
Total	1328	548	359	77	-	03	10	29	795	39	1860

Physical Infrastructure

Name of the Project	CCTV	Walk through gates		Metal Detectors		Popup barriers		Boundary Walls	Razor Wires	
		Yes	No	Yes	No	Yes	No		Yes	No
Govt.	425	10	78	29	59	09	79	6-8 Feet	57	31
Private.	1287	53	116	68	101	43	126		97	72
Total:	1712	257		257		257			257	

*****